INSERT+ 1V SM





Wall mount series. Fixtures consist of:

- Multi-step powder-coat painting process, optimized against UV rays and corrosion.
- Copper-free (<1%) precision die-cast aluminum housing and ring/faceplate.
- Frosted, tempered, silk-screened, flat glass diffuser.
- Custom molded, anti-aging gasket(s).
- Custom MCPCB utilized to maximize heat dissipation and promote long LED life.
- To be used with a 24 V low-voltage driver (ordered separately, consult factory for more information).
- Pre-wired factory sealed cable for external electrical connection included.
- The luminaire may be configured with numerous options and multiple standard finishes. Not all options are available in all configurations. Consult factory for more information about specification sheet details to build your light.
- Stainless steel recessed rough-in kit to be ordered separately.
- 5-year warranty.

IP 65 | WET | cULus LISTED | ADA | RAL

FINISHES

- AN-96 / Iron gray / Textured
- GR-94 / Aluminum metallic / Textured
- WH-87 / White / Textured
- BK-81 / Black / Textured
- RB-10 / Iron rust / Textured

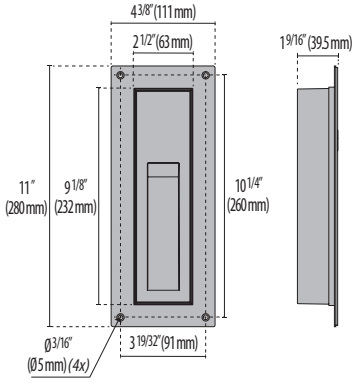

Lumen Output	3K	4K
INSERT+ 1SM	319	333

Scan here for installation instructions

Order Guide - Insert+1VSM

Order code example	IN+1VSM-5W-3K-AM-24V-RDR

Series	Wattage	CCT	Finish	Driver	Options/ Accessories
IN+1VSM Insert + 1VSM	**5W** 5 Watt (Max)	**3K** 3000K **4K** 4000K	**AM** Aluminum Metallic **IG** Iron Gray **IR** Iron Rust **WH** Textured White **BK** Textured Black **CC** Custom Color	**24V** 24V low voltage only **24V-RDR** 24V Remote Non-Dimming Driver (1:1) 17097 **24V-RDR010V** 24V Remote 0-10V Dimming Driver (1-15 fixtures) 17029	**HP** Hidden mounting plate

CONSULT FACTORY FOR OTHER AVAILABLE OPTIONS NOT SHOWN ABOVE



Hidden mounting plate option

Performance in Lighting reserves the rights to make all necessary changes without prior notice.
Performance in Lighting - 2621 Keys Pointe - Conyers, Georgia 30013 - USA - voice 770.822.2115 - info.usa@pil.lighting
www.performanceinlighting.com

Rev. 08/28/2026